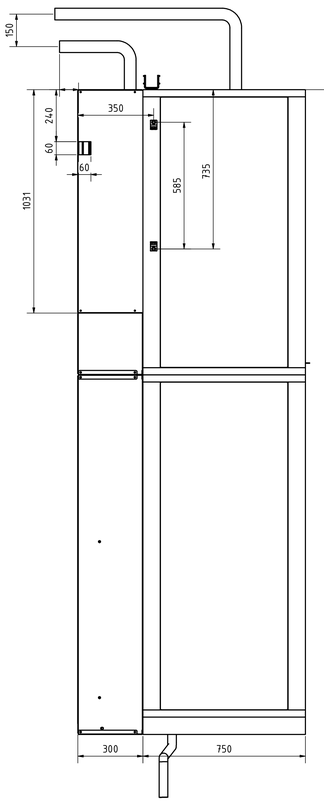

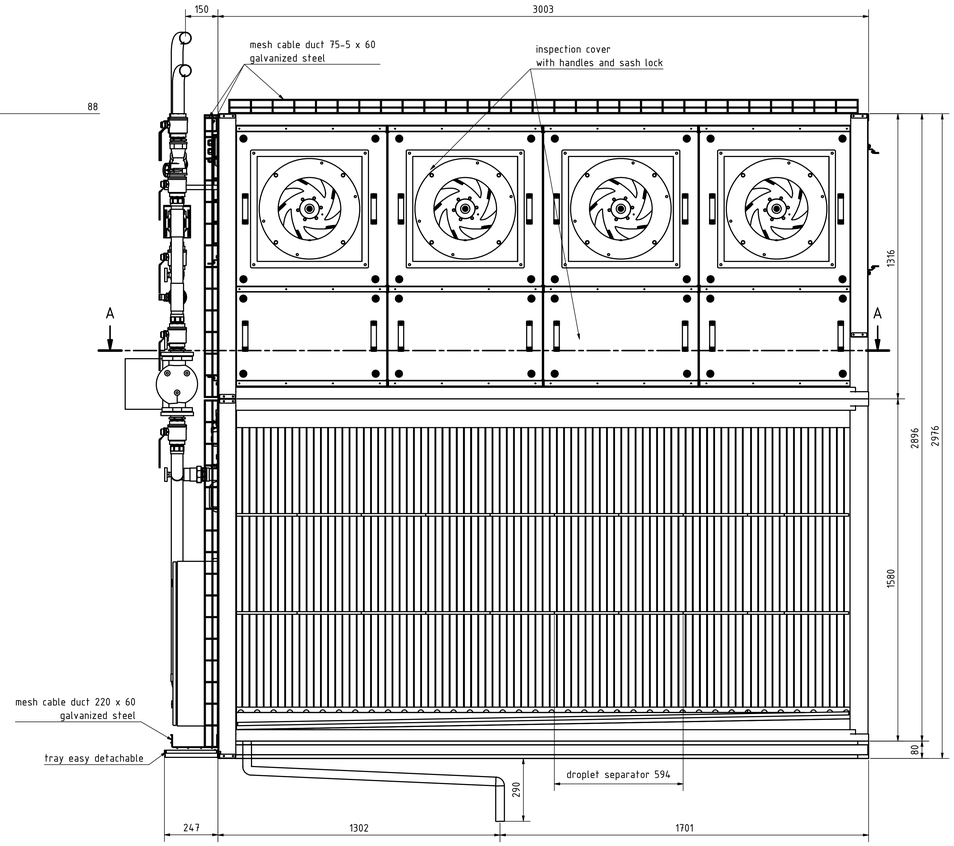

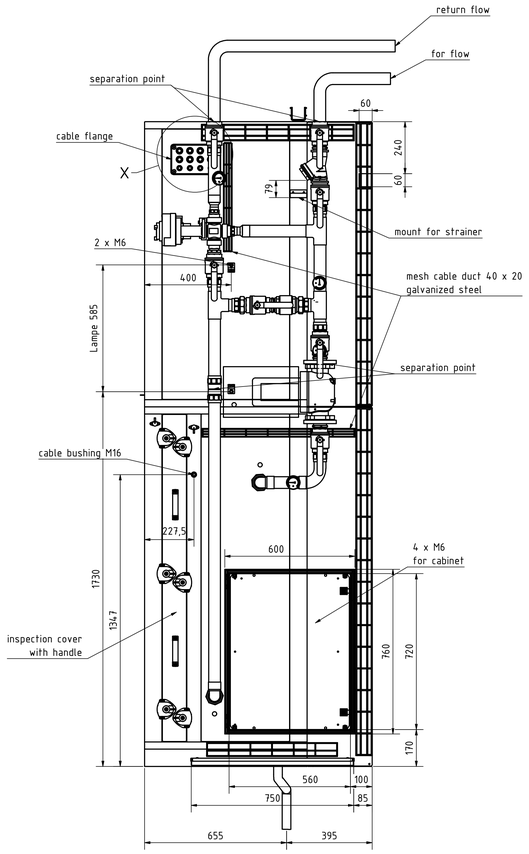

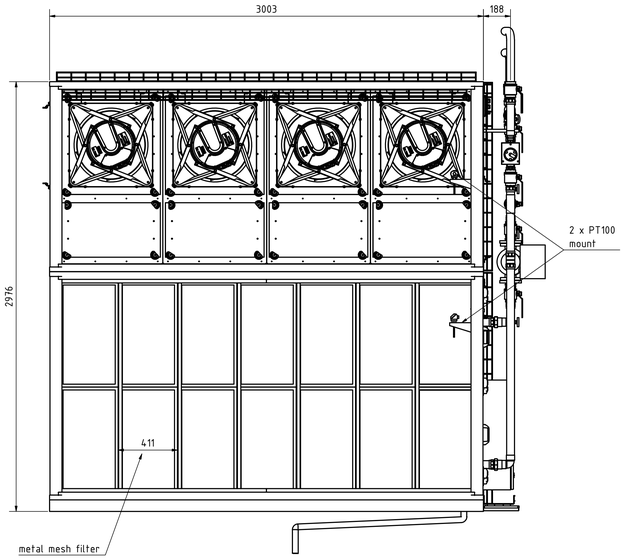

X (1 : 5)

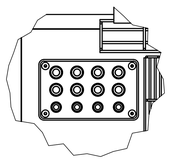

cable flange with:
8 x M22
4 x M16

A-A (1 : 10)

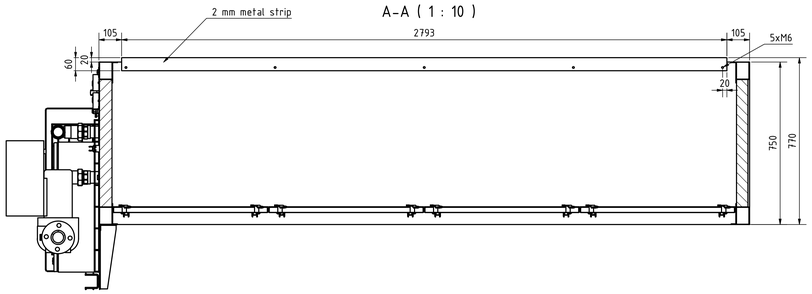

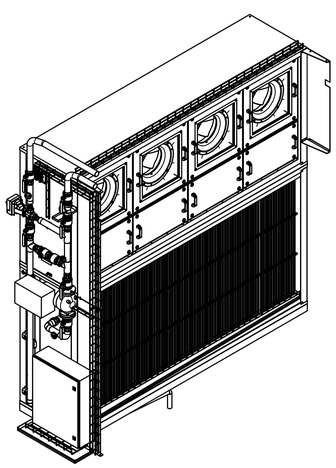

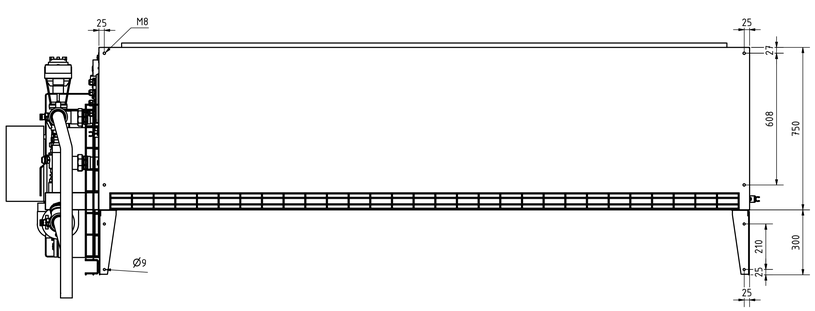

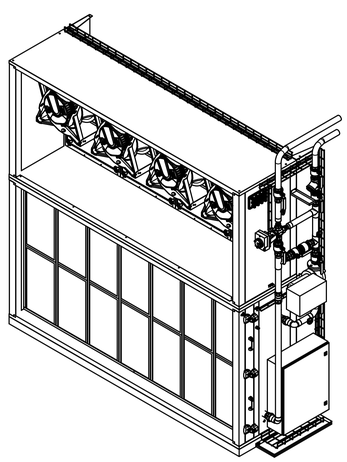

Cooling coil with control unit.
Cooling capacity of coil: 50 kW
Fan capacity of coil (EC fan): 4 x 7,500 = 30,000 m³/h, 4 x 4.5 kW
Cooling medium: 66%/34% water-glycol mixture
Coolant temperature: +4/8°C

Air outlet: 8°C
Air inlet: 12°C

Drip separator (TAS) with plastic clips.
TAS removable.
Drip tray V2A with plastic pipe connection to the siphon

Stainless steel filter:
Inner and outer expanded metal mesh V2A,
outer layer: 2x 16 mm diamond pattern as cover mesh
inner layer: 6x 6 mm inside.
Corners riveted.

Mesh ducts:
Manufacturer Pflitsch
75-5 x 60 V2A
40 x 20 V2A
220 x 60 V2A

Housing:
Wall V2A
Joints sealed on the inside

Fin spacing greater than 3 mm

The registers consist of copper pipe with pressed-on epoxy-coated aluminum lamellas.

Control unit included in delivery, consisting of pump /3-way valve/check valve/pipes/flanges

Pump:
Mains connection: 3~400V/50 Hz
Protection class: IP 55

1x A4 control unit diagram with labeling.

Flow direction of the medium in the control unit marked with clearly visible arrows on the pipes.

REV 03

Rox-Klimatechnik GmbH
Langenbachersfr. 25
D-57586 Weitefeld

cooling register
W860676

Project	7543.01
Drawn	jkorth
Date	30.10.2025